gTAG - usb to jtag interface

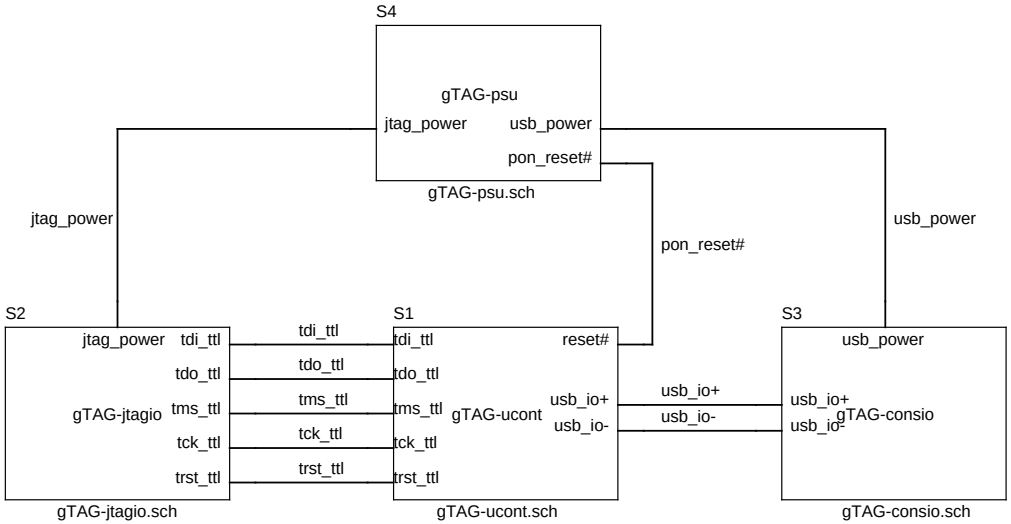

JTAG (IEEE1149.1) consist of tdi, tdo, tck, tms, (trst)

(C) 2001 Stefan Petersen (spe@stacken.kth.se)

This schematic is free software; you can redistribute it and/or modify it under the terms of the GNU General Public License as published by the Free Software Foundation; either version 2 of the License, or (at your option) any later version.

This schematic is distributed in the hope that it will be useful, but WITHOUT ANY WARRANTY; without even the implied warranty of MERCHANTABILITY or FITNESS FOR A PARTICULAR PURPOSE. See the GNU General Public License for more details.
You should have received a copy of the GNU General Public License along with this program; if not, write to the Free Software Foundation, Inc., 59 Temple Place, Suite 330, Boston, MA 02111 USA

TITLE: gTAG - top level	
FILE: gTAG.sch	REVISION: $Revision$
PAGE 1 OF 5	DRAWN BY: Stefan Petersen (spe@stacken.kth.se)